UNCLASSIFIED

AD NUMBER
AD028904
CLASSIFICATION CHANGES
TO: unclassified
FROM: confidential
LIMITATION CHANGES
TO: Approved for public release, distribution unlimited
FROM: Controlling DoD Organization: Office Of Naval Research, Arlington, VA 22203.
AUTHORITY
Office of Naval Research ltr dtd 15 Jan 1982; Office of Naval Research ltr dtd 15 Jan 1982

THIS PAGE IS UNCLASSIFIED

Armed Services Technical Information Agen

Because of our limited supply, you are requested to return this copy WHEN IT HAS SERVED YOUR PURPOSE so that it may be made available to other requesters. Your cooperation will be appreciated.

AD 28904

NOTICE: WHEN GOVERNMENT OR OTHER DRAWINGS, SPECIFICATIONS OR OTHER DATA ARE USED FOR ANY PURPOSE OTHER THAN IN CONNECTION WITH A DEFINITELY RELAT GOVERNMENT PROCUREMENT OPERATION, THE U. S. GOVERNMENT THEREBY INCURS NO RESPONSIBILITY, NOR ANY OBLIGATION WHATSOEVER; AND THE FACT THAT THE GOVERNMENT MAY HAVE FORMULATED, FURNISHED, OR IN ANY WAY SUPPLIED THE SAID DRAWINGS, SPECIFICATIONS, OR OTHER DATA IS NOT TO BE REGARDED BY IMPLICATION OR OTHERWISE AS IN ANY MANNER LICENSING THE HOLDER OR ANY OTHE PERSON OR CORPORATION, OR CONVEYING ANY RIGHTS OR PERMISSION TO MANUFACTU USE OR SELL ANY PATENTED INVENTION THAT MAY IN ANY WAY BE RELATED THERET

Reproduced by

DOCUMENT SERVICE CIENTER

KNOTT BUILDING, DAYTON, 2, OHIO

CONFIDENTIAL

AD No. 29704
ASTIA FILE COPY

Confidential

EDWARDS STREET LABORATORY

YALE UNIVERSITY

NEW HAVEN, CONNECTICUT

Experiments Toward an Underwater Electromagnetic Detection Scheme

Ray W. Jackson

This document has been reviewed in accordance with OPNAVINST 5510.17, paragraph 5. The security classification assigned hereto is correct.

Date: 4/19/54 By direction of Chief of Naval Research (Code 462)

SUPPORTED BY

OFFICE OF NAVAL RESEARCH

CONTRACT NONR—609(02)

Confidential

54AA-26912
Copy #4

CONFIDENTIAL

NR-238-001
Contract Nonr-609(02)

Edwards Street Laboratory
Yale University
New Haven, Connecticut

Experiments Toward an Underwater Electromagnetic Detection Scheme

Ray W. Jackson

Technical Report No. 26
(ESL:521:Serial 010)
22 March 1954

This document contains information affecting the national defense of the United States within the meaning of the Espionage Laws Title 18, U.S.C., Sections 793 and 794. Its transmission or the revelation of its contents in any manner to an unauthorized person is prohibited by law.

Summary

A system for setting up an alternating-current field between two parallel electrodes was laid on the bottom of the West Passage of Narragansett Bay in May, 1953, for the purpose of investigating the feasibility of a scheme for detecting mines (1,2). This report will describe the laying of pick-up coils and the development of apparatus on shore up to the point of detecting the passage of ships in October, 1953. The problems remaining for the further development of sensitivity will be discussed.

Underwater Apparatus

The parallel electrodes were bare copper cables, gauge 0000, 300 meters in length and 200 meters apart. They were fed at one end by insulated cables, also 0000 gauge, from a submerged matching transformer. The matching transformer was connected to a 30 c/s one kilowatt generator on shore by a 3-conductor rubber-insulated cable 2850 feet in length. The general layout of the system is shown in Fig. 1. The depth of water was 30 to 45 feet. A more detailed description of the splicing, laying, and anchoring of the feeder system, and a description of the generating apparatus on shore is given in (3). An estimated 30 watts A-C power was fed into the sea water by the parallel electrodes.

The pick-up coils were of 215 turns of No. 28 copper cotenamel wire on a one foot square form. Each was imbedded in tar, mounted with its plane vertical on a concrete slab, and connected to shore by about 3500 feet of MCOS-2 cable (2-conductor, shielded, with neoprene cover). Fig. 2 shows one of the coils mounted on a concrete slab. Fig. 3 shows the MCOS-2 cable faked out in a Torpedo Retriever boat ready for laying. The locations of the two coils used are shown in Fig. 1 as C_4, C_5. (C_1, C_2, C_3, were a group of three orthogonally mounted coils laid in the proximity of C_5, but which proved unusable because of leaks developing in the cable.) The coils were about 100 meters apart. After laying, each was oriented with its plane at right angles to the length of the system by a diver with a compass. This particular orientation

of the coils was chosen so that the coils would be most sensitive to that component of the magnetic field in which the contributions from current flowing in the water between the electrodes would play the largest part, since that component should be the one most sensitive to the perturbing effects of conducting objects in the region between the electrodes.

The original scheme involved the use of bare metallic probes at the corners of a 100 meter square for the detection of the electric fields in the region between the feeder electrodes. It had been decided to use coils instead, at least at this stage, for the following reasons:

(1) It could be considered that it is basically the current field in the conducting medium between the electrodes that is perturbed by the presence of objects of conductivity different from that of the medium. For detecting perturbations in the current field the electric potential method and the magnetic method should be reasonably equivalent.

(2) The laying and anchoring problem would be much simpler, since only two concrete anchor positions would be required instead of four.

(3) If any important advantage could be gained by orienting the probes or coils for minimum pickup of the exciting field, it would be much easier to rotate a coil at one spot than to shift around widely separated probes. At the same time, however, it was recognized that, because the magnetic field at one point would be the sum of contributions from distributed sources of differing

phase, the magnetic field might be elliptically polarized so that an indefinitely sharp minimum could not be obtained.

(4) Coils would pick up less interference from D-C or very low frequency fields such as might be generated by ocean and tidal currents in the earth's magnetic field, since the induced emf is proportional to frequency. In addition, coils would avoid difficulties from the electrolytic potentials that might develop between bare metallic electrodes in the sea water. Low frequency currents from the above sources could modulate the desired signals by partial saturation of the input transformers, unless the input transformers were very large. (Input transformers for the shore apparatus are probably essential to avoid interference from induced currents in the ground loops.) Fears in this respect were justified towards the end of the experiments when the coils were replaced by probe pairs for the purpose of measuring the amplitude and phase of the electric fields. The input transformers of the amplifiers were ordinary commercial high-efficiency transformers (Triad "Geoformers") and would saturate easily. The probes used were silver-silver chloride. Evidently at least one probe had become contaminated enough that magnetization of the input transformer by electrolytic currents made it difficult to obtain a good phase measurement.

(5) From a coil the leads to shore remain close together and are balanced for pickup of induced noise, temperature variation, and so on. In the case of metallic probes with, say, a 100 meter span, there is at least 100 meters of single lead.

(6) With coils it would be easier to keep check on the condition of the cable insulation, since the normal resistance from coil leads to shield would be infinite. With probes the connection of shield to ground at the shore end would have to be broken to test the cable, and once any leak had developed from the shield to the seawater further measurement could not reveal the condition of the insulation from inner conductors to shield.

Apparatus On Shore

Two low-noise frequency-selective amplifiers on shore were used to amplify the signals from the two coils. Let us call the amplified signals E_1 and E_2. E_1 was then shifted in phase by a variable amount and balanced against E_2 in a mixing network. The difference signal was again amplified, then rectified in a phase-sensitive rectifier circuit for display by a recording meter. The reference phase for the phase-sensitive rectifier was obtained from E_1 after phase-shifting. In this way it was hoped to balance out the constant, standing component of voltage induced in the coils by the primary field and show up the differential perturbations due to local changes in the fields around one coil or the other. A block diagram of the system is shown in Fig. 4. Two recording meters kept track of the amplitudes of the two coil signals separately, and an oscilloscope was used to monitor the phase of the unbalance signal with reference to E_1.

The voltage gain of the amplifiers at 30 c/s, measured by introducing a calibrating signal across a one ohm resistor in series with the input circuit, from the input to the point "output to mixer unit", was about 3.2×10^5 or 110 db. The noise level referred to the input was about 0.01 microvolt rms. The input impedance level was nominally 60 ohms, though there was some mismatch since the combined resistance of pickup coil and input cable was 110 ohms. The frequency response is shown in Fig. 9. The bandwidth at half voltage points is 5 c/s and there is a deep notch at 60 c/s to reduce interference from power-frequency fields. The amplifiers were modified to a narrower bandwidth from that used in June, 1953, when they were used for a survey of the magnetic field over the system to check its position and operation (4,5). Other modifications included the introduction of a calibrating resistor in the input circuit, and a linear rather than logarithmic amplitude metering circuit. The present circuit is given in Fig. 10. The amplifiers were powered by storage batteries, using a vibrator unit for the high voltage.

The circuit diagram of the circuits for mixing the signals and recording the unbalance is given in Fig. 11. E_1 is shifted in phase by a variable amount up to almost 180 degrees, then balanced against E_2 in a resistive network. The voltage level of E_1 and E_2 at the mixing stage is about 0.2 volts rms. The

phase difference between the inputs from the two coils was about 45 degrees. E_1 is also further amplified by about 40 times and applied in push-pull to the first control grids of two 6BN6 "gated beam" pentodes. The unbalance or difference signal from the mixing network is amplified by a factor of about 2000 and applied to the second, or "quadrature", control grids of the 6BN6's in parallel. (The name "quadrature" refers to the usual application of the tube as an F-M detector, and has nothing to do with the phase relationships in the present application.) The characteristics of the 6BN6 are such that the first, or reference, signal, as long as it is large enough, "saturates" and functions as a square gate, with the output voltage of the tubes virtually independent of its amplitude. The level at which the first grid saturates, however, is still controlled by the quadrature grid. The quadrature grids are operated in the linear region so that the output voltage of each tube during its "on" period is proportional to the voltage on its quadrature grid. Consideration of the phase relationships of the grid driving voltages will show that the integrated output of the stage is a balanced voltage the polarity of which is dependent on the phase of the quadrature grid signal with respect to the reference signal.

The plates of the 6BN6's are direct-coupled, via integrating networks of time constant 1 sec., to the control grids of the output amplifier stage which, in turn, drives an Esterline-Angus 0-1 recording milliammeter. The filaments of the phase-shifting

stages and the unbalance amplifier are supplied from a storage battery as a precaution against 60 c/s hum modulation. High voltage is from a Lambda regulated power supply.

Working Up Of Apparatus

(1) Microphonics:

The 30 c/s 1 kw motor-generator set had been mounted on the floor of the wooden building in which the detection apparatus was to be set up. This caused a strong vibration, with a slow beating at a period of about 3 sec., which generated signals in the amplifiers of about 1/10 the amplitude of the coil signals, in spite of the earlier stages of the amplifiers being shock mounted. The trouble was cured by moving the motor-generator onto the ground underneath the floor of the building. Otherwise the situation was very good from the standpoint of low microphonics, since the building was isolated on a point of land, with no nearby traffic, and no personnel in the building other than those working on this apparatus.

(2) Electrical isolation:

Since the input leads to the amplifiers were so long (about 3500 ft.) it could be expected that precautions would be necessary against induced noise, earth currents, and so on. The two inner conductors of the MCOS-2 cable were a twisted pair (so that magnetically induced currents would be balanced out) and were

surrounded by copper braid shielding against electrostatic pickup. The input transformer had an electrostatic shield between primary and secondary windings. Nevertheless, any unbalance of the input loop with respect to ground would still allow induced or earth-current voltages in the shield to cause currents to flow in the input loop. Such unbalance to ground could arise from (a) inductive or capacitive asymmetry in the transformer primary winding with respect to the secondary and with respect to ground, (b) capacitive asymmetry of the submerged coil to the sea water--this was bound to be present since the coil was layer wound, but its effect was probably very small, (c) unsymmetrical breakdown of insulation from the inner conductors to the sea water, (d) unsymmetrical impedance to ground introduced by the input attenuating and calibrating circuits. The last two causes were probably the most serious. However, it was not possible to carry on the experiments for long enough to establish the magnitudes of these effects as compared to the magnitude of the ambient noise picked up directly by the detector coils. To do so would require, at the least, setting up a bridge-balanced input circuit to balance the impedances to ground. In fact, as will be discussed later, the non-linearity of the input circuits was judged to be the most serious factor limiting the sensitivity. The above factors would probably become very important in an improved apparatus in which the non-linearity limitation was overcome.

(3) Moisture and corrosion:

The amplifying and balancing apparatus was of necessity at the seaside. Moisture was a frequent source of noise and instability in the amplifiers. The amplifier components and wiring had been sprayed with plastic early in the summer when they were first constructed, but it was not possible to protect them completely in this way, nor was it possible to maintain this protection while the apparatus was under development and revision. It was found helpful to mount the amplifiers in the rack upside down so that the tubes warmed their own bases, but it was often necessary to run the equipment for three or four hours before reasonable stability was reached. In an apparatus of much greater precision it may be expected that moisture, condensation, and corrosion would be serious problems to overcome.

Experiments in Ship Detection

The installation and development of the detection apparatus went on during July, August, and September. By the beginning of October the apparatus was in adjustment and seemed to be operating with asmuch stability and sensitivity as was going to be attainable with the type of components on hand or in ready supply. Arrangements were therefore made for a boat to run back and forth over the system, roughly guided by three marker buoys, while its course was photographically recorded from shore.

Two cameras were used, mounted at fixed survey points at Fort Getty and Prospect Hill. Human operators kept the cameras sighted on the boat while the camera shutters were automatically tripped every ten seconds by synchronizing pulses sent over a telephone line. The synchronizing pulses at the same time were used to actuate chronograph pens on the Esterline-Angus recorders to put synchronizing marks in the margins of the charts. After the operation the films were developed and projected on a screen. The azimuth angles of the boat from the two survey stations were then reconstructed from noting the boat's position with respect to previously calibrated landmarks on the far shore (which was always included in the photographs). The course of the boat could then be plotted and its position at any point along its course could be correlated with the signals recorded by the detection apparatus. The photographic method allowed much more frequent observations of the boat's position than would be practicable for surveyors making transit readings. Three operations were attempted, the last one being the most successful.

(1) Operation on Oct. 13, p.m.:

This operation was mostly in the nature of a rehearsal, to test the camera synchronizing scheme, the exposure times (some shots had to be taken directly into a strong glint of sunlight from the water surface), and to see whether any significant detection signals would be obtained which would warrant further observations. The boat was a navy "L"-boat, of about 60 tons

displacement, steel hull, length 65 ft., beam 19 ft. Communication was maintained with the L-boat and between camera operators by VHF radio.

As it turned out, there was trouble with the shutter-triggering mechanism of the camera on Prospect Hill. By the time this was noticed and corrected, the camera at Fort Getty was almost out of film, so that only a small part of the boat's course was recorded. The record of the detection or unbalance signal is shown in Figure 5. Two or three probably significant deflections were obtained (marked "probable" on the chart, Figure 5) at times when the L-boat was ascertained by binoculars to be somewhere in the upper region of the system. The principal other signals to be noted are interference from VHF radio transmissions from a transmitter a few feet away from the detection apparatus. The L-boat was instructed to change its engine speed about half way through the operation to make sure that the signals picked up were not merely frequency components generated by the shaft and propeller rotation.

The Esterline-Angus charts are displayed upside down so that the time axis runs in the normal left-to-right direction. The circuits were so set up that, as displayed, an upward deflection corresponds to a <u>decrease</u> in amplitude of E_1 (obtained from coil C_5) or, of course, to an <u>increase</u> in amplitude of that component of E_2 (obtained from coil C_4) which is 180 degrees out of phase with E_1 (the phase of E_1 is the reference phase for the

phase-sensitive rectifier). A downward deflection corresponds to the converse of the above or to a shift in phase of either signal. The time scale is one minute per division on the Esterline-Angus Chart. The synchronizing marks occur every 40 seconds, being counted down from the camera pulses by a scale-of-four mechanism constructed from latching relays. Additional marks in the margin could be inserted by manual control to note the time of occurrence of other events such as re-adjustments of the balance controls.

(2) Operation on Oct. 14, a.m.:

For comparison purposes a smaller boat was used, a buoy-boat 37 feet in length, with wooden hull, 11 foot beam, 8.7 tons displacement. Part way through the operation one of the wires carrying synchronizing signals was accidentally broken so that part of the camera record was lost. However, there are no obviously significant pen deflections on the chart (Figure 6). Those places marked on the chart with a question mark which were picked out as being possibly significant were found to correspond with points in the boat's course when it was well away from either detection coil. Hence it was not considered worth while to plot the remainder of the boat's course. The synchronizing marks for the first part of the record are 40 seconds apart, for the second part of the record they are 20 seconds apart.

(3) Operation on Oct. 14, p.m.:

The boat used was again the L-boat. The course it followed

is plotted in Figure 7. Only every other camera frame was used to plot the course. Point No. 110 is probably in error. The detection signal record is shown in Figure 8. There are six fairly close passes of the L-boat near the detecting coils, at which times deflections of the recording pen may be noted. The approximate distance of the boat from the coil is noted on the record, in meters, for each encounter, as well as the orientation of the boat's hull to the electrode system. The largest deflections, as might be expected, occur for the boat lying athwart the electrode system. A section of the record after the operation, when no boats were in the vicinity of the system, is included for comparison.

Discussion of Results

The signals from the steel-hulled L-boat, 60 tons displacement, about 20 meters in length, are almost indistinguishable from noise for the cases when the boat was headed parallel to the electrodes. When the boat was headed perpendicular to the electrodes clear indications were obtained up to ranges of about two boat lengths from C_5, the coil nearest the input end of the electrode system. No significant indications were obtained from the smaller, wooden hulled boat. These results are only slightly encouraging, but at the same time the detecting power of the apparatus is still a long way from the practical limit.

The voltage sensitivity of the pen deflection is 1.4×10^{-8} volts change in either input per small division on the chart. The voltage from C_5 was about 3 microvolts. Hence each small division on the chart represents a relative change in the voltage from C_5 of about 0.5%. The average noise level is of the order of 3 divisions peak to peak. In the noise there is observable (without going so far as to make a detailed correlation analysis) a fairly definite component with period of the order of 8 to 10 seconds. Superimposed on the short-term fluctuation or noise is a slow drift at an average rate of about 30 small divisions per hour, usually in the downward direction as displayed.

The short-term fluctuations may be attributed qualitatively to the following sources: (a) internal circuit noise, random in character except that its frequency distribution before rectification will be limited by the passband of the amplifier, (b) external random noise picked up by the coil or otherwise induced in the input circuit, including frequency components nominally outside the passband, but which can enter by cross-modulation with other components or with the signal frequency via nonlinearities in the input circuit, (c) external "coherent" noise, principally from power lines.

The effect of 60 c/s fields was particularly bad because of the original choice of 30 c/s for the signal frequency. Any intermodulation of the 60 c/s with the signal frequency in the

input circuits could generate a 30 c/s difference frequency very close to the signal frequency. This difference frequency would be amplified equally with the signal frequency and would beat with it to generate low frequencies in the rectifier output. The period of rotation of the Lissajous figure formed by the signal frequency and the power line frequency was found to be of the same order as the 8 to 10 second period observed in the noise. The tentative conclusion is that this explains the largest part of the short-term noise. There are various addenda to this conclusion that should be noted, however. The intermodulation could be occurring also in the generating part of the system by inadequate filtering of the generator field supply. The two sides of the West Passage (Conanicut Island, and the mainland)are served by different power companies; small differences in frequency between the two power companies could add further complexity to the fluctuations. Any asymmetry of the amplifier passband with respect to the signal frequency could result in a quasi-coherent low-frequency spectrum in the output of the rectifying circuits. It is probable that the passband was still sufficiently broad, and that the signal frequency was well enough centered in the passband, that the latter effect was relatively small.

The first steps to be taken in improving the noise figure would be (a) change the signal frequency, (b) increase the power input to the electrode system, (c) use a larger, less easily saturable input transformer to reduce non-linearities, (d)

increase the efficiency and effective turns-area product of the pick-up coils (this would improve the ratio of signal to circuit noise and to noise induced in input cables, would not so much reduce intermodulation effects), (e) attack the circuit noise, by using special high-grade components, selection of tubes, extensive precautions against moisture, narrower bandwidth, improved feedback stabilization, and so on.

However, by the time the short-term noise was reduced by even a factor of ten, it is apparent that the slow drift would become quite serious. The cause of the drift was not obvious, but it seems likely that it was associated with non-linear electrochemical effects between the feeder apparatus and the sea water. When the amplifiers were connected to a laboratory signal generator the drift was absent, showing that it originated in the underwater part of the system. It was not correlatable with the tides. Whenever the apparatus was turned on after a period of rest the signals were observed to decay about 30% in an exponential fashion over the first half hour or so of generator operation, though the input power was kept constant at one kw. Measurement of the resistance of the primary leads after an hour's running showed that if the decay was due to heating somewhere the heating was not in the primary circuit. Besides, it is highly unlikely that such an extreme temperature rise as would be necessary to explain a change of the order of 30% could take place anywhere in the wiring of the underwater system. When a rough check was made on October 9 of the magnetic

field at the water surface over the system, the observations strongly suggested that the feeder system was deteriorating, and in particular that water leakage was taking place somewhere around the matching transformer. This would give rise to locally concentrated electric currents around the leakage points, electrolysis would take place, and the resistances of the electrical leakage paths would change with time, thus changing the electrical current distribution in the electrode system as a whole. It is also possible that electrochemical changes could occur in the electrodes themselves. Such changes would be non-uniform down the system since the current density is not uniform down the system. The relative magnitudes and time constants of these possible effects were not established.

There is the possibility that the non-linearity, temperature sensitivity, and variability in other respects of the interface between a bare copper electrode and sea water might prove to be an inherent limiting factor to the sensitivity obtainable with the parallel electrode feeder scheme, but the development of leaks prevented any conclusions on this point.

Recommendations

It is obvious that the major task for development lies in the pickup or receiving part of the system, and that the degree of refinement so far obtained in the receiving circuits is far from the practical limit. It is not possible to estimate just how many orders of magnitude away the practical limit is, since

each improvement of an order of magnitude may disclose new sources of disturbance previously unsuspected. There is much to be found out regarding the effects of tidal and convective (thermal) currents, wave motion, temperature and salinity variations, variations in the earth's magnetic field, and so on, in generating electromagnetic noise in the conducting medium, and in causing minute shifts in distribution of an extended field such as that set up for a detection system of this nature. There is much to be found out, too, regarding the propagation of electromagnetic fields in the bounded conducting medium, the variation in ampli ude and phase of the fields over the volume of the system, and the amplitude and phase of the perturbations from various types of target.

The above scheme, and other basically similar devices, are probably worthy of continuing investigation because of the following essential feature which has still to be exploited to the limit: the signal to be detected is coherent with a signal deliberately injected into the medium. Thus correlation techniques should make possible a discrimination against noise which is beyond that possible for any detection system based on passive listening.

It should be possible to learn a great deal about the nature of the problems, and to progress a long way in the design of the essential features of the receiving apparatus, however, without going to the expense and trouble of laying and maintaining

a large fixed system of a particular configuration. For example, the emphasis could be placed on experiments in communication at low frequencies, including experiments in the comparison of different components arriving at a point, or in the comparison of signals travelling by different paths to separated points, and so on. Of course some form of transmitting system would still be necessary, but beginning with a simpler configuration might provide data more useful for the prediction of the properties of other forms.

At the same time it is evident from experience that such experiments to be fruitful must be carried on as a long-term program. Apparatus of extremely low noise and high stability and precision, particularly where unknown variables may determine the design, can only be developed by degrees, eliminating one source of limitation after another as it is encountered. Since some steps may involve considerable re-design and reconstruction, and the procuring of special components, the process takes time. Since there are many practical details to be learned which are peculiar to the problem of working with the sea, so that the design of successful apparatus is likely to become something of an art, the process requires continuity.

Acknowledgments

The construction of the coils and the splicing and laying of the cables was handled by Mr. R.P. Whorf, Mr. Clarke Andersen, and Mr. C.S. Robinson. Many thanks are due Lieutenant R.S. Edwards, USNR, for the delicate navigation of small boats and for his expert services as a diver. Mr. Andersen was responsible for the arrangement and operation of the synchronized photographic system for recording and plotting the ships' courses. He was assisted in the final stages of plotting by Mr. P.H. Sutter.

Ray W. Jackson

References

1. Dyba, R.V., Strickler, T.D., Wadey, W.G. "The Search for a System" ESL Technical Report No. 11, Dated 5 January 1953. SECRET.

2. Wadey, W.G. "Plans for Experimental Test of Palinurus Principle" ESL Technical Memorandum No. 9, dated 17 September 1952. SECRET.

These references are SECRET and only abstracts of pertinent parts have been available.

3. Roberts & Linden. "Report of Project Arlington", dated May 26, 1953. CONFIDENTIAL.

4. Pieper, G.F., Whorf, R.P., Davis, A.H., Jackson, R.W. "Survey of the Magnetic Field at the Surface Due to an Underwater Electrode System Fed at 30 Cycles per Second" ESL Technical Memoreandum No. 28, Dated 12 February 1954. CONFIDENTIAL.

5. Pieper, G.F., Jackson, R.W. "Apparatus for Surveyof a Magnetic Field Pattern at the Ocean Surface Established by Equipment Operating at 30 Cycles per Second on the Ocean Bottom" ESL Technical Memorandum No. 29, Dated 12 February 1954. CONFIDENTIAL.

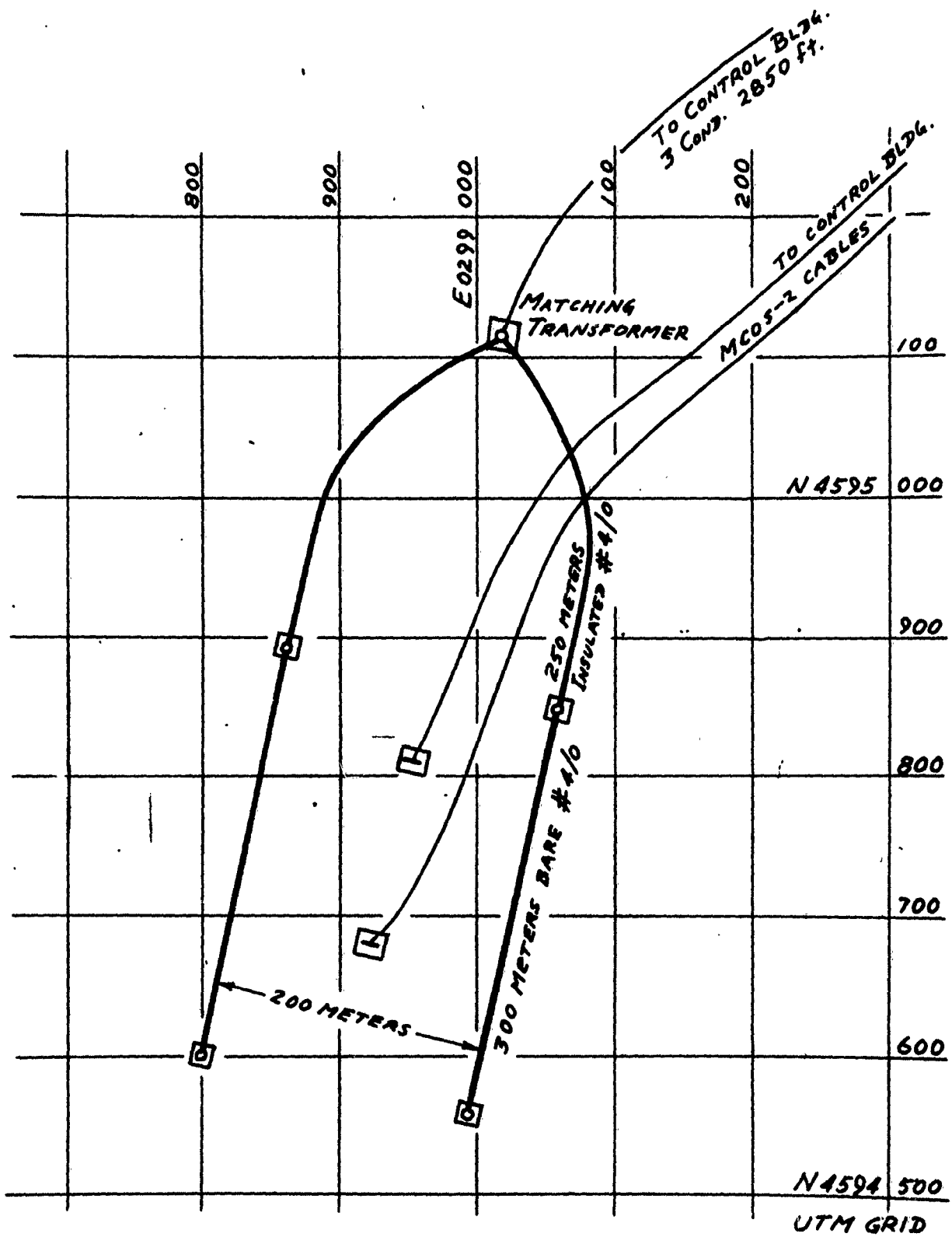

FIG. 1. GENERAL LAYOUT OF SYSTEM

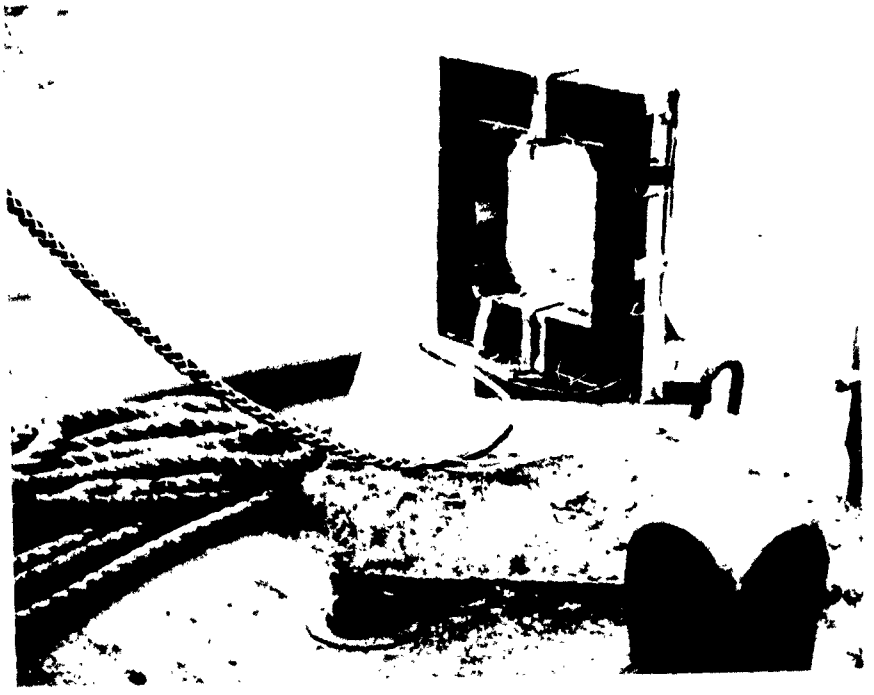

Fig. 2. Pickup coil mounted on concrete slab.

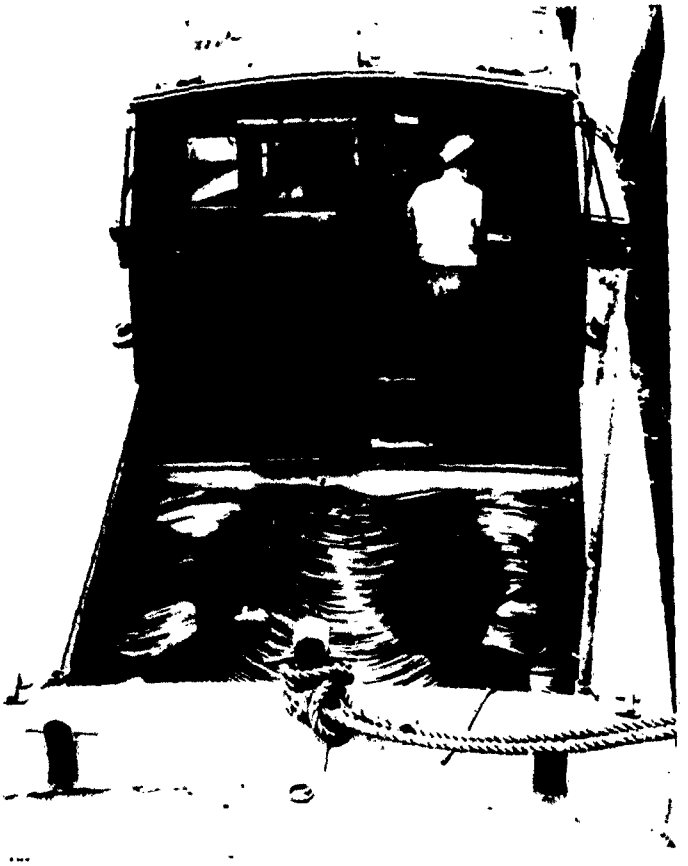

Fig. 3.
MCOS-2 Cable faked out ready for laying.

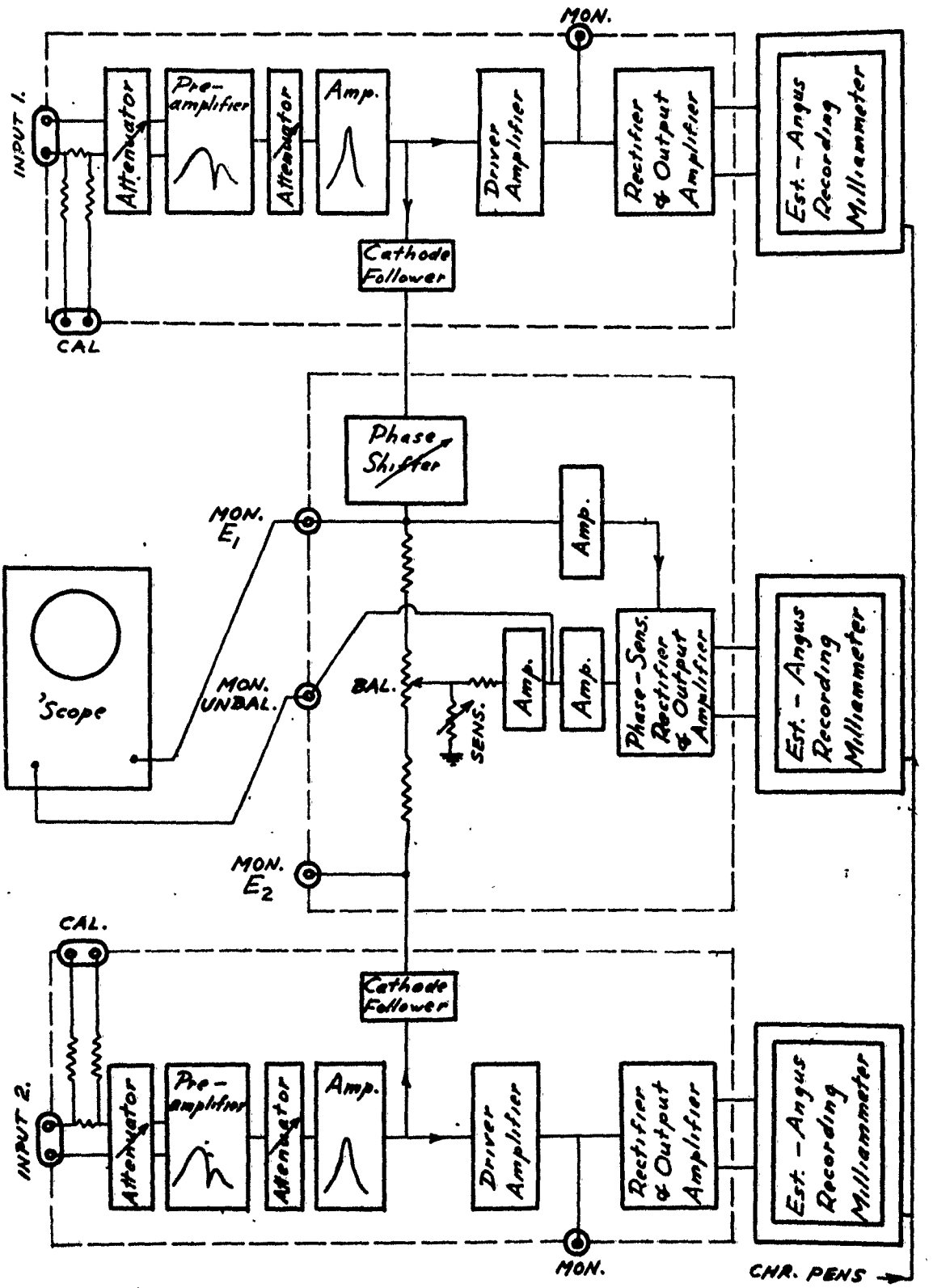

FIG. 4. BLOCK DIAGRAM OF DETECTION CIRCUITS.

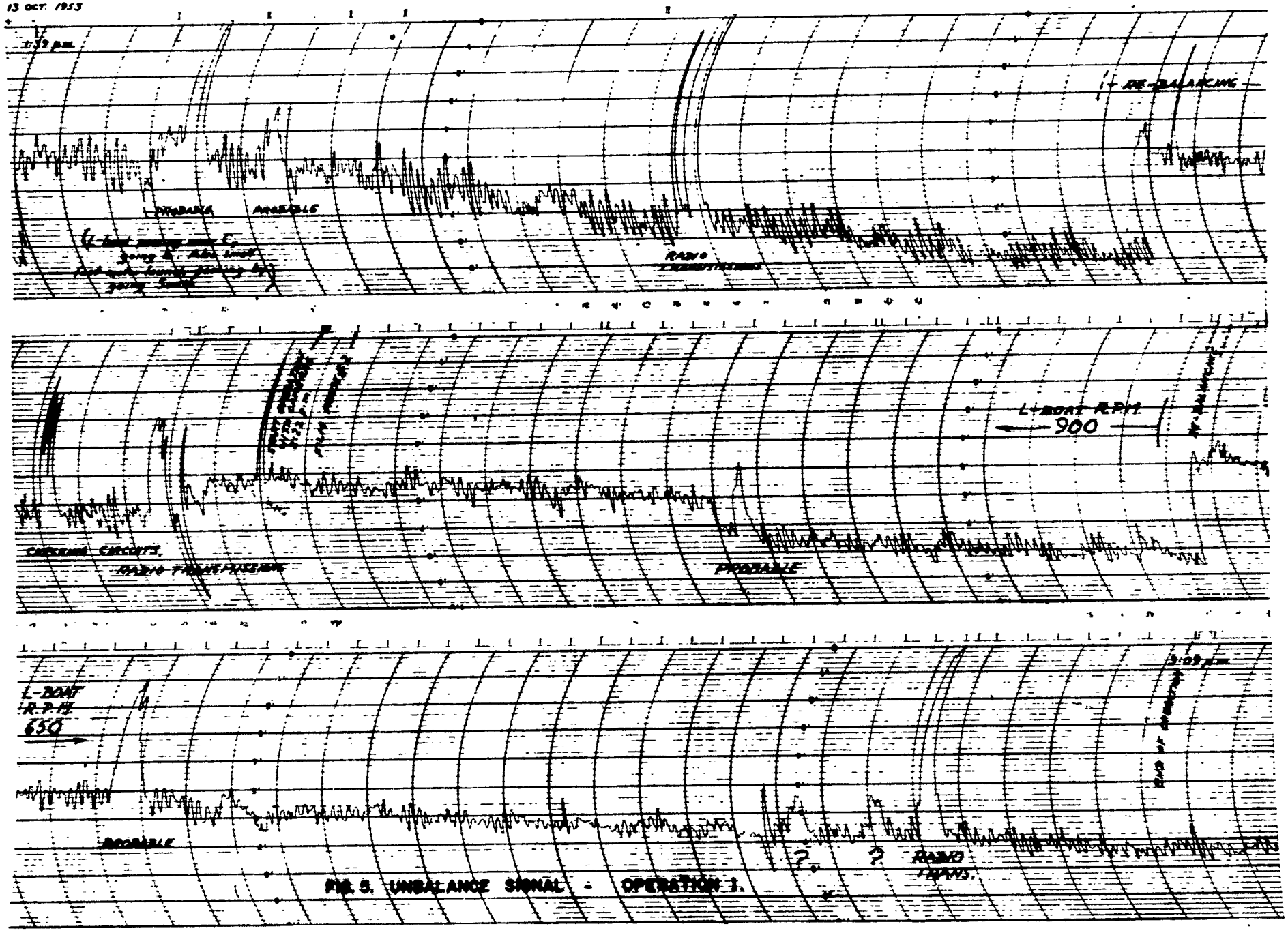

FIG. 5. UNBALANCE SIGNAL - OPERATION 1.

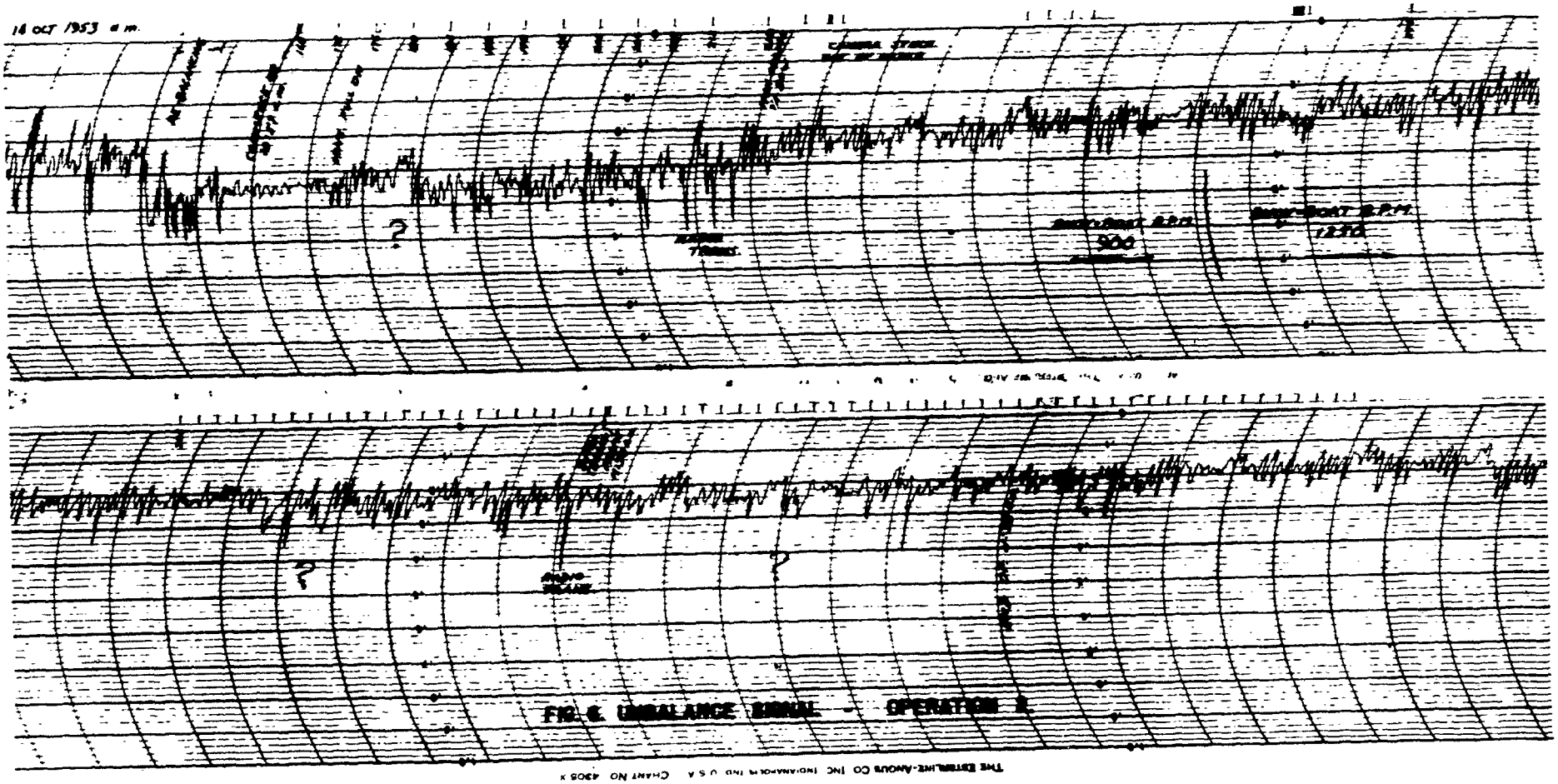

FIG. 6. UNBALANCE SIGNAL - OPERATION 2.

THE ESTERLINE-ANGUS CO INC INDIANAPOLIS IND U S A CHART NO 4305 X

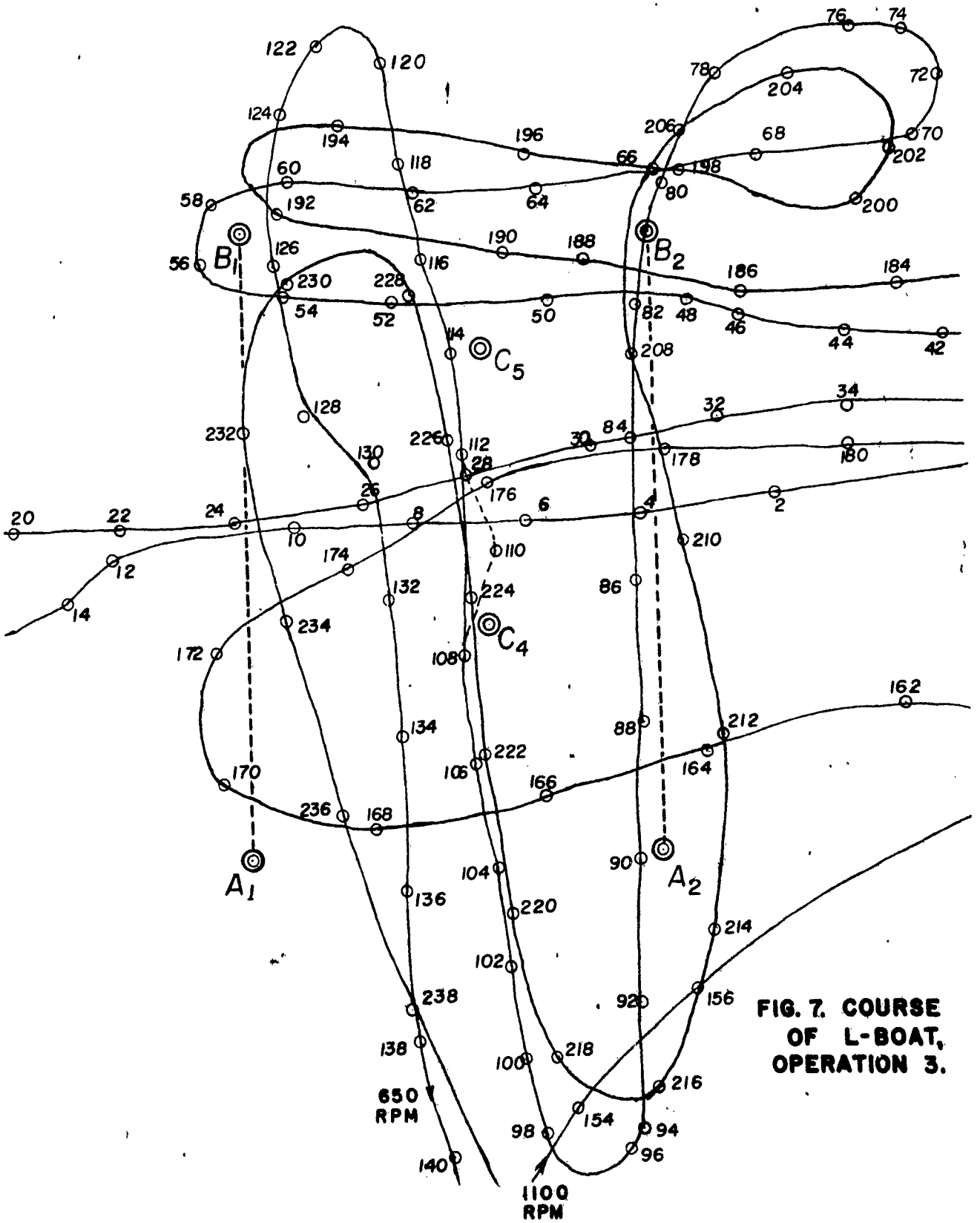

FIG. 7. COURSE OF L-BOAT, OPERATION 3.

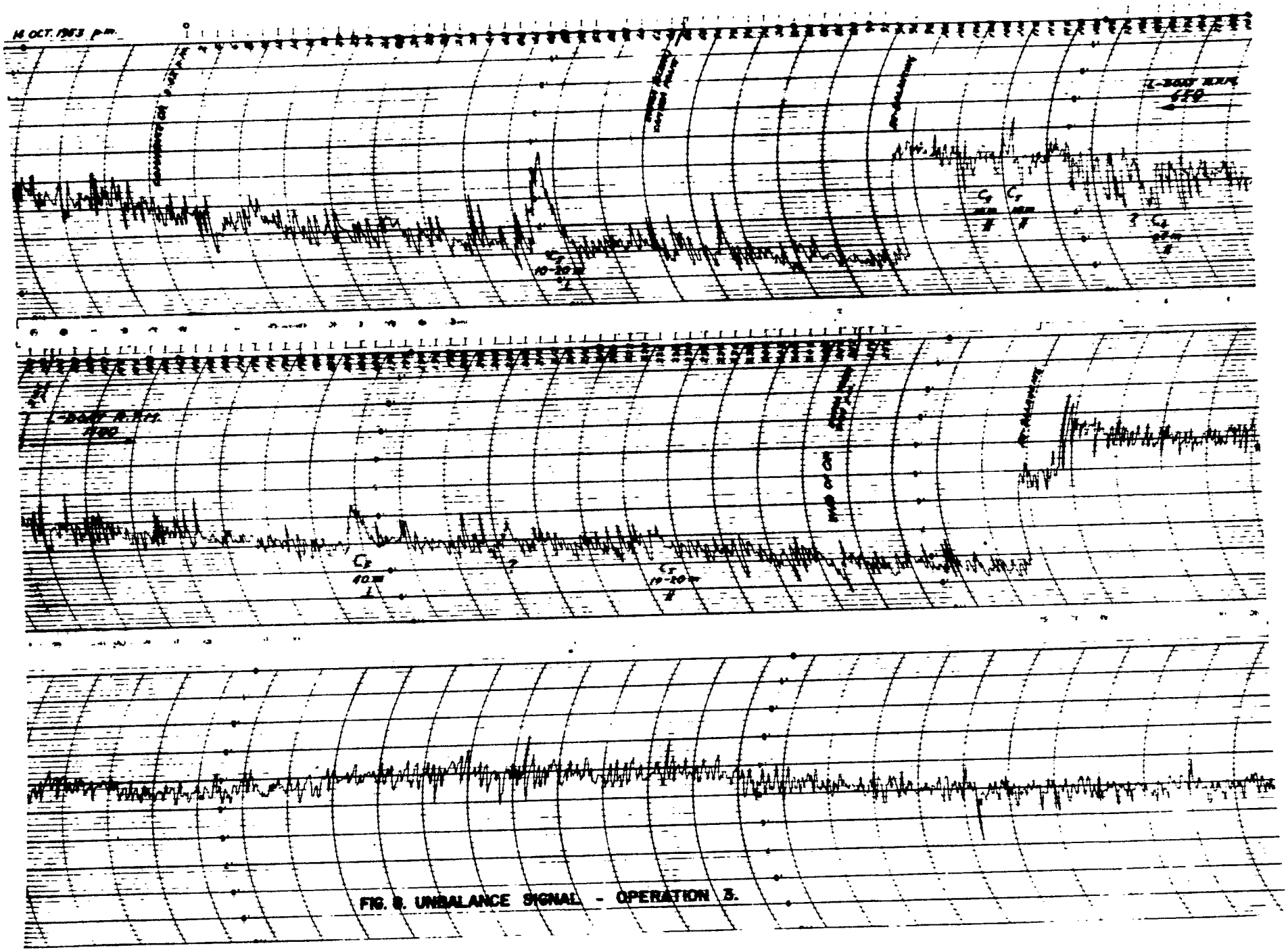

FIG. 8. UNBALANCE SIGNAL - OPERATION 3.

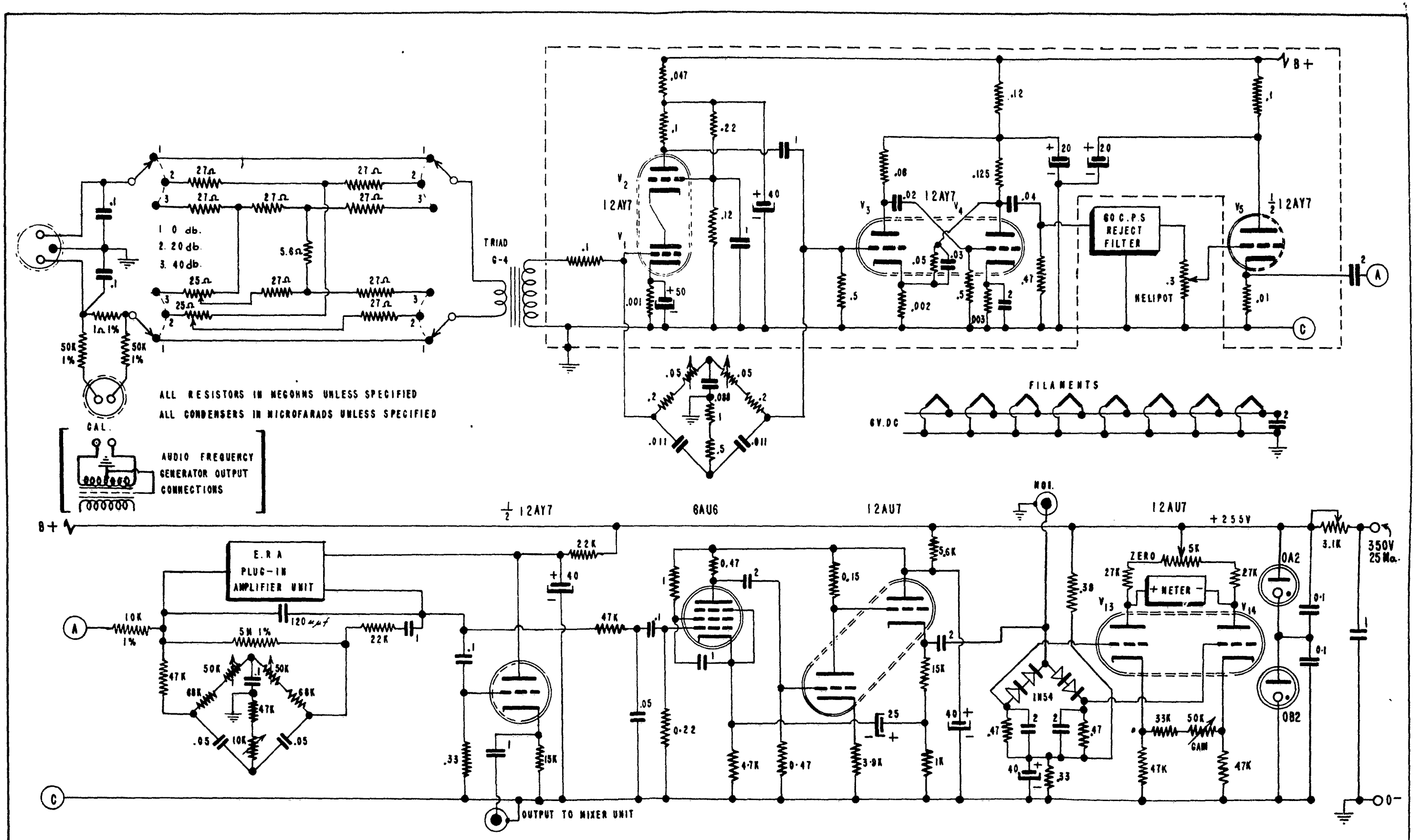

60 CPS REJECTION FILTER: KAY-LAB TWIN'T' FILTER, MODEL 503A0 – KALBFELL LABORATORIES, INC., 1090 MERENA BLVD, SAN DIEGO 10, CAL.

E.R.A AMP: PLUG-IN-AMPLIFIER TYPE 416C2, ENGINEERING RESEARCH ASSOC. INC., 1902 W.MINNEHAHA AVE., ST. PAUL 4, MINN.

METER: ESTERLINE ANGUS D.C. MILLIAMETER FULL SCALE 1 MA – E.A. CO. INC., P.O. BOX 596 INDIANAPOLIS 6, IND.

DWN BY F.A. BARONE 9 FEB 54

FIG. 10 AMPLIFIER CIRCUIT DIAGRAM

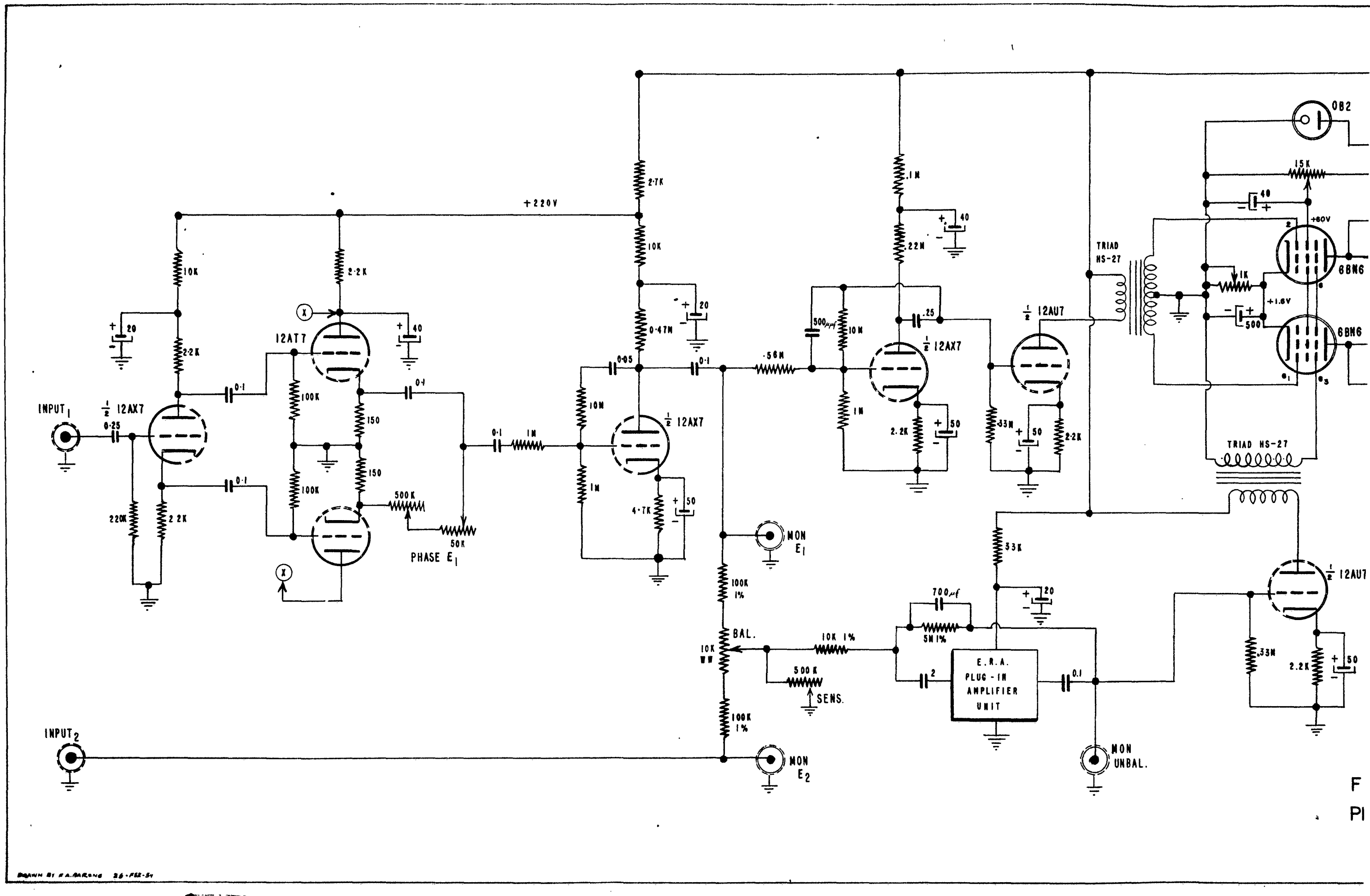

F

Pl

DRAWN BY F.A. BARONE 26-FEB-54

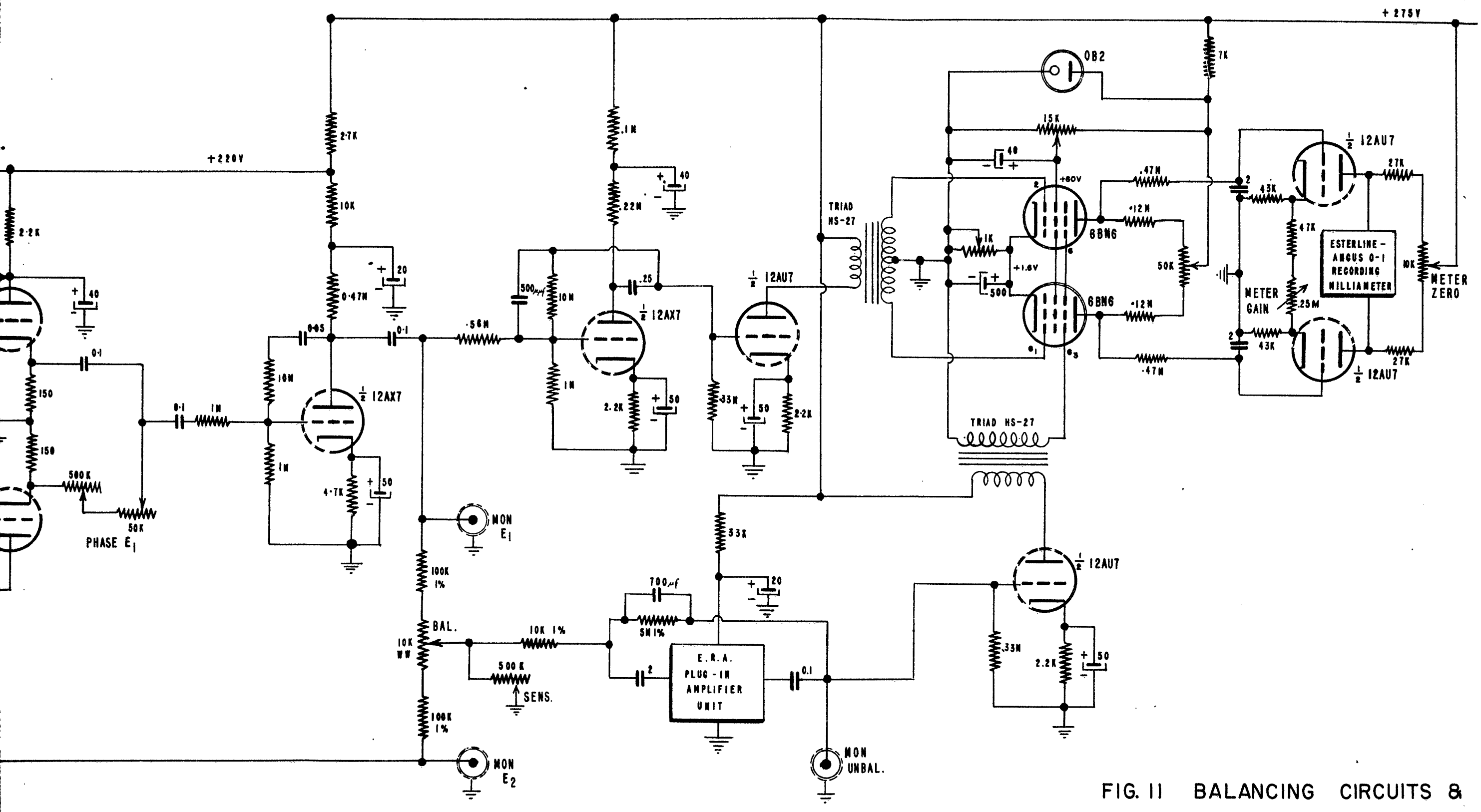
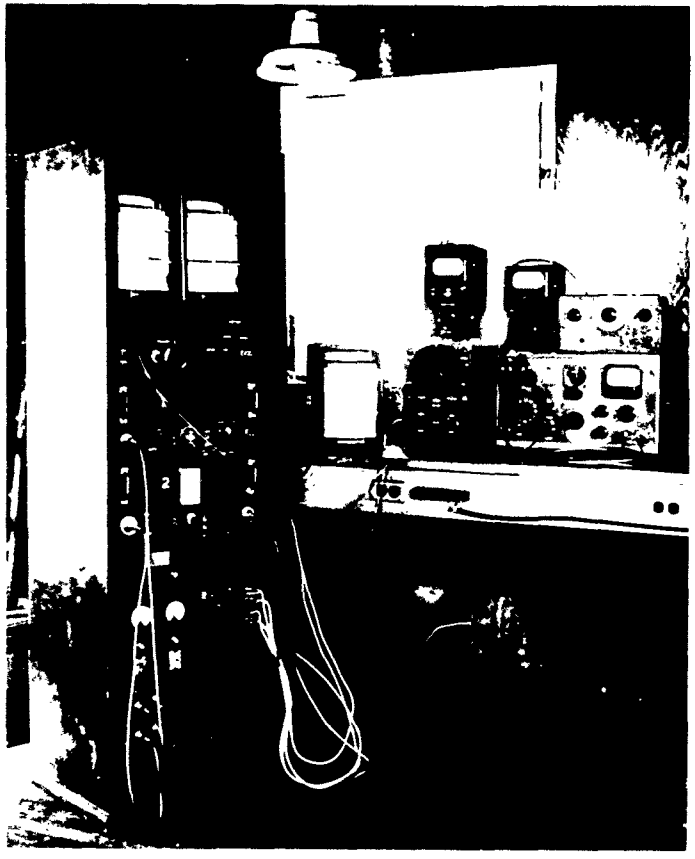
FIG. 11 BALANCING CIRCUITS & PHASE SENSITIVE RECTIFIER